5G CHAMPION

5G Communication with a Heterogeneous, Agile Mobile network in the Pyeongchang wInter Olympic competitioN

5G ready: Orchestration of 5G services – Core network aspects

EU-KR Symposium on 5G, Feb. 23, 2018

Taesang Choi

Mobile Core H/W Infrastructure for GangNeung K-ICT

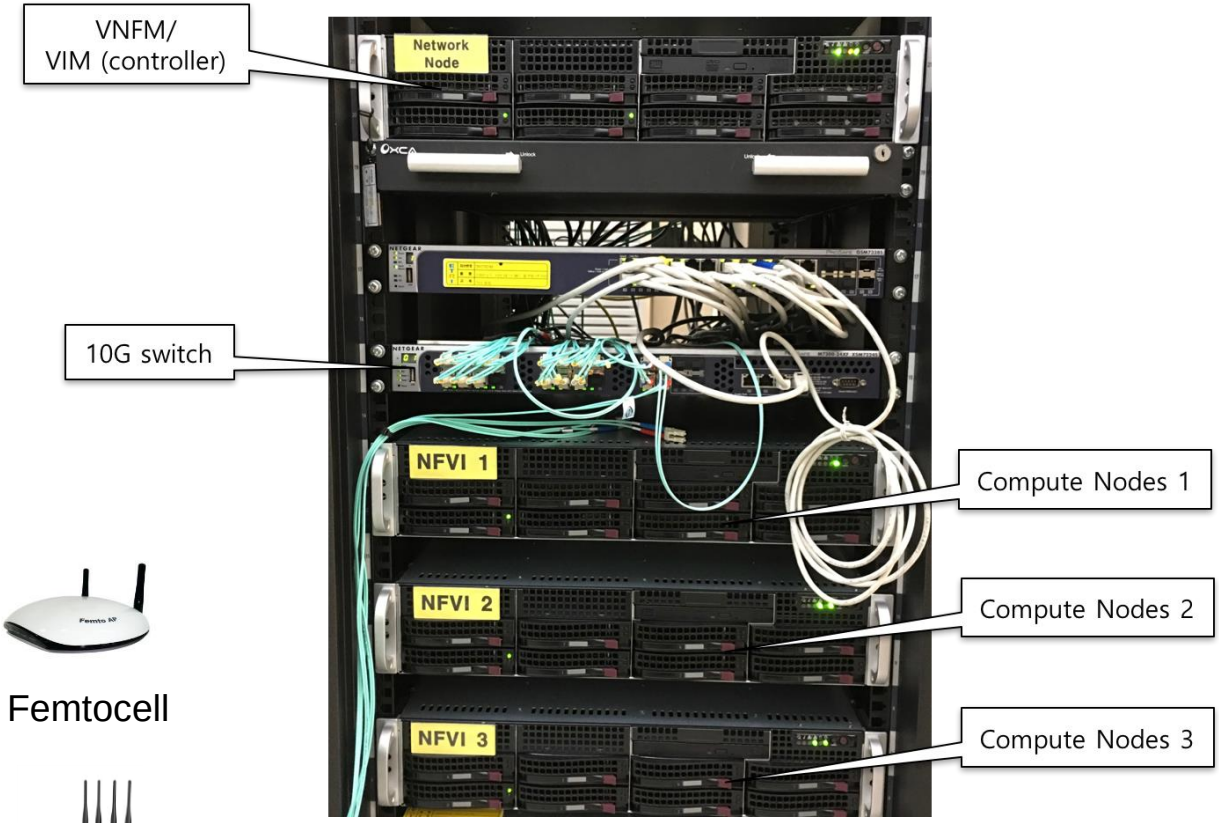

Femtocell

WiFi AP

Mobile Core Virtual Network Functions (VNFs)

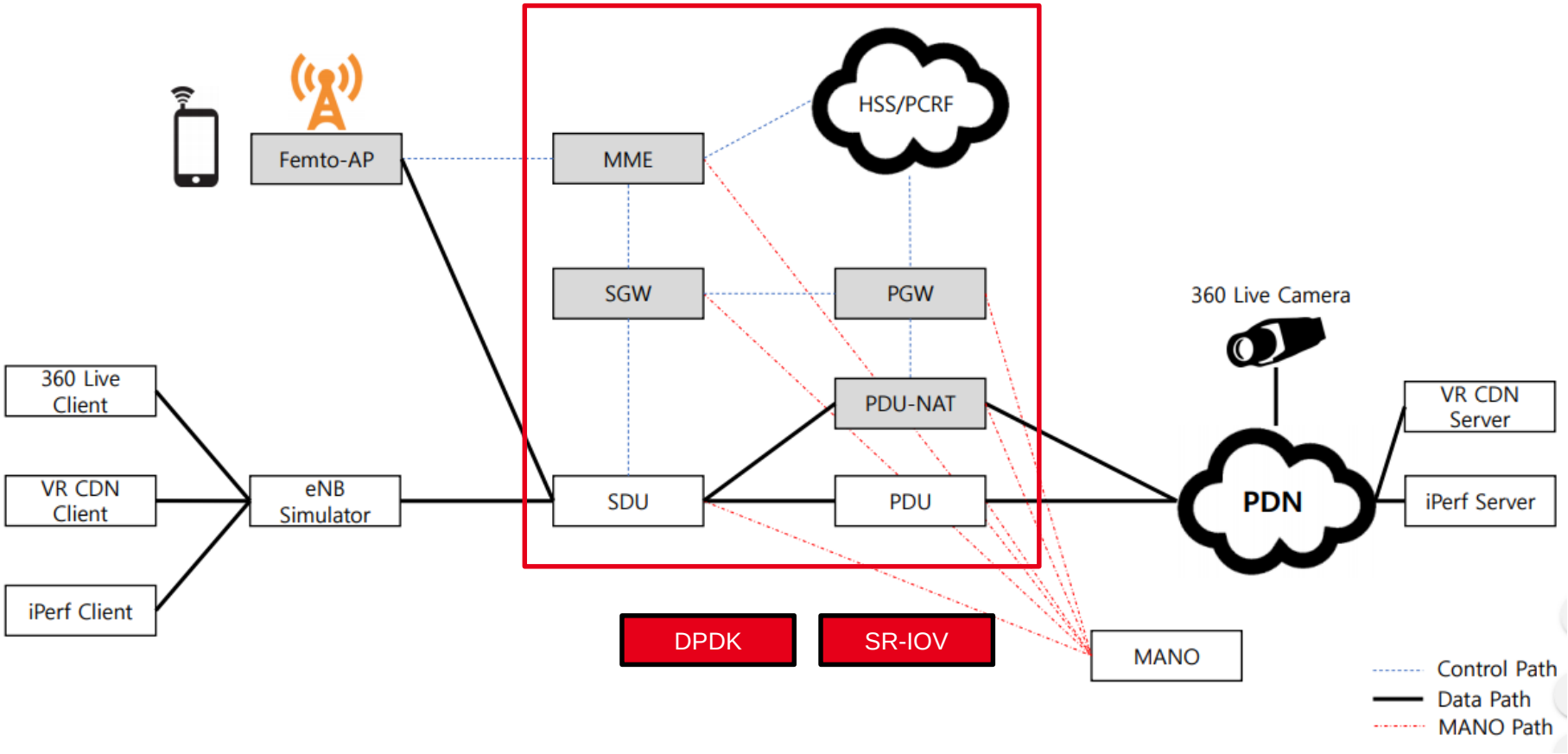

MANO (Management and Orchestration for 5G Core)

- **Manages the lifecycle of NS**
- Exposes NS lifecycle management interfaces to the OSS/BSS
- Sends NS lifecycle management notifications to the OSS/BSS
- Exposes virtualized resource management interfaces to the VNFM
- Sends virtualized resource management notifications to the VNFM
- Manages the VNF lifecycle via the interfaces exposed by the VNFM
- Manages virtualized resources via the interfaces exposed by the VIM.

Functional Management of Network Service

Functional Management of (V)NFs

Functional Management of SW Instances

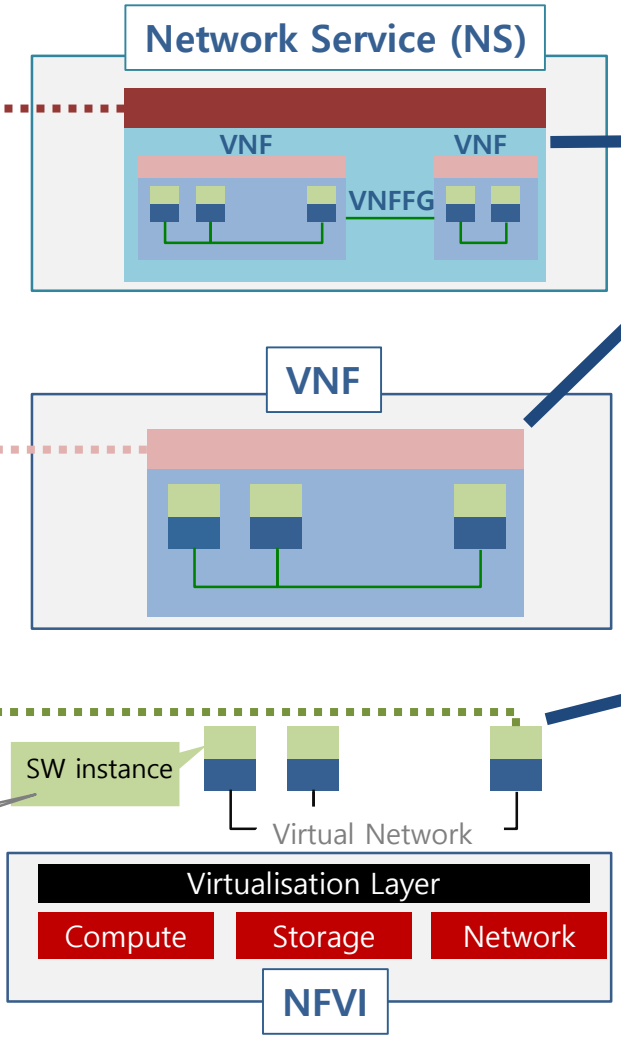

NFV Management & Orchestration

Network Service (NS) Management

VNF Management (VNFM)

- **Manages the lifecycle of VNFs**
- **Manages virtualized resources associated to the VNF** it manages via the interfaces exposed by the VIM or NFVO
- Exposes VNF lifecycle management interfaces/APIs to the VNF, EM and NFVO.
- Sends VNF lifecycle management notifications to the VNF, EM and NFVO
- **Manages VNF initial configuration** via the interfaces exposed by the VNF.

Virtualized Resources Management (VIM)

- **Manages the NFV infrastructure resources** (compute, network and storage) in one or more NFVI-PoPs.
- Exposes virtualized resource management interfaces/APIs to the VNFM and NFVO
- Sends virtualized resource management notifications to the VNFM and the NFVO

MANO Implementation: VNF Instances Management

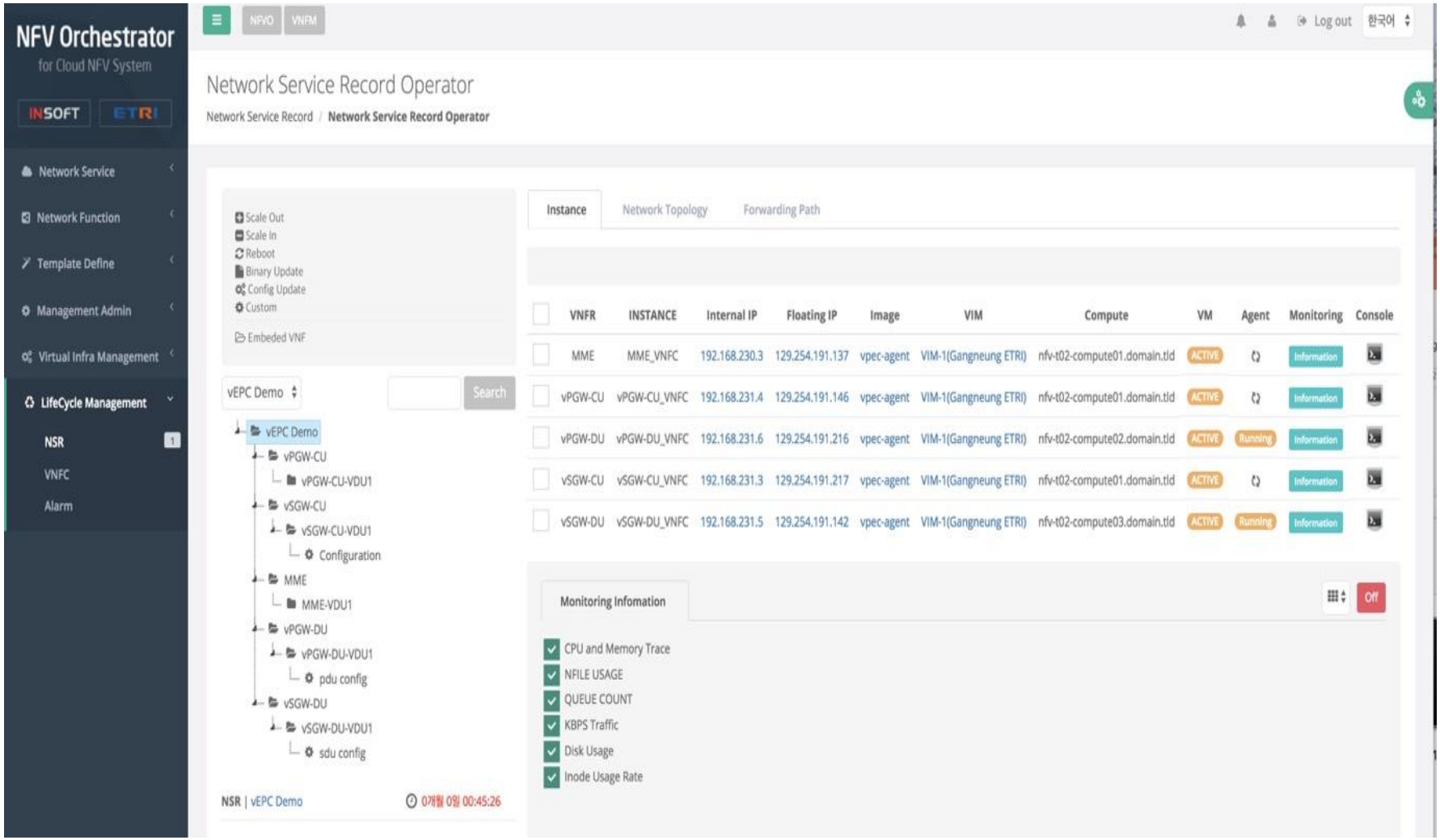

MANO Implementation: VNF Topology Management

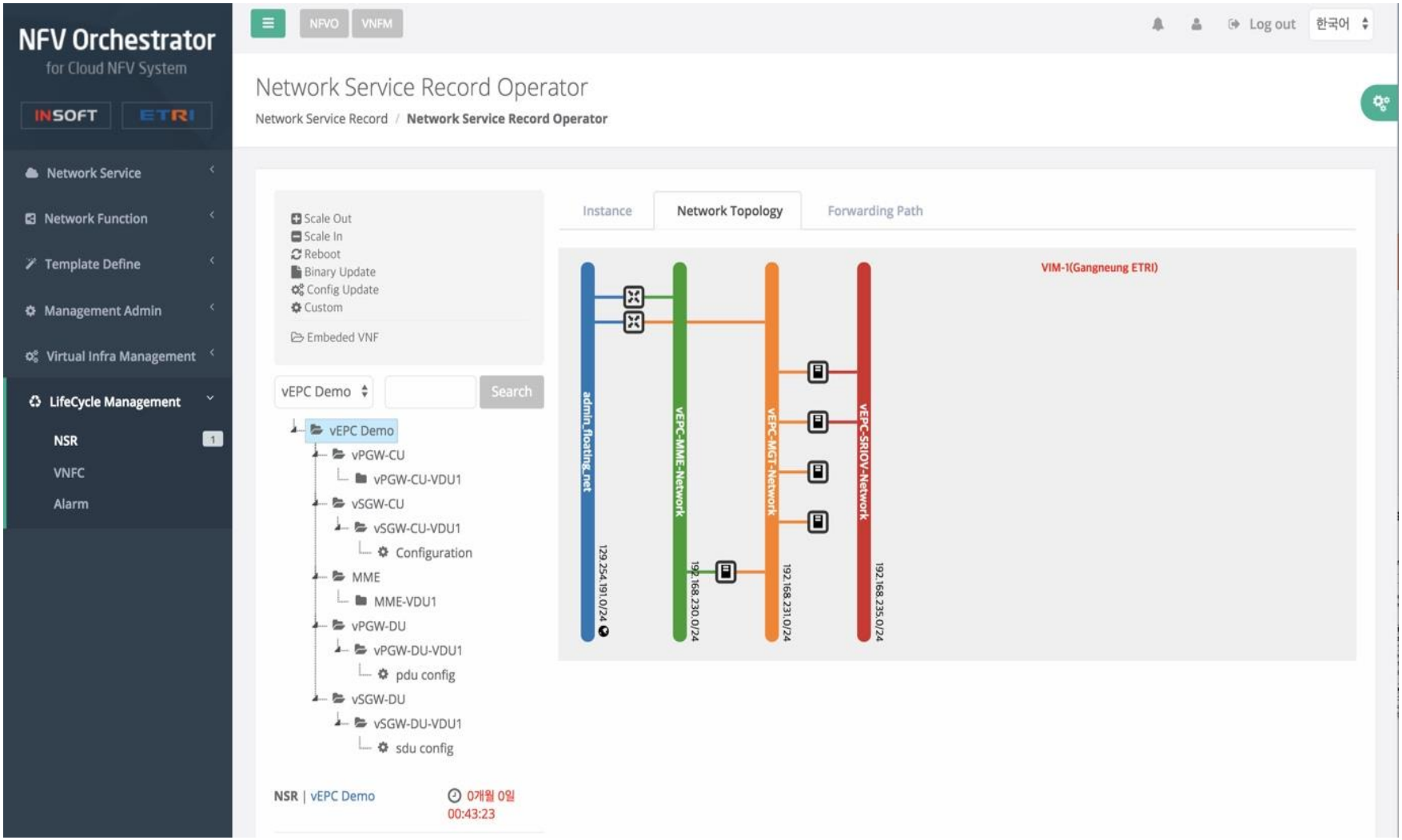

MANO Implementation: VNF Resource Management

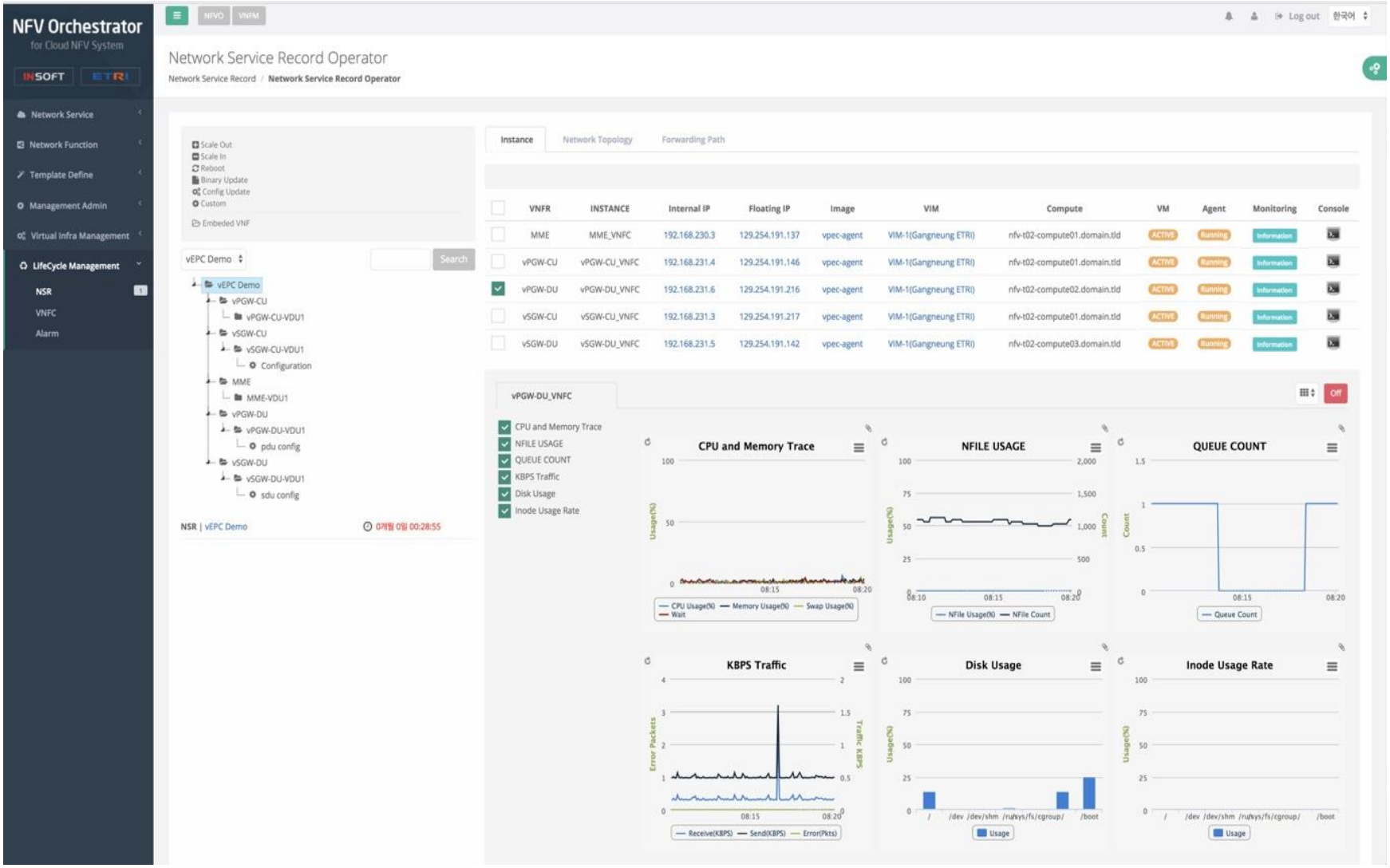

Interoperability Testing between EU-KR

- Intercontinental Interconnection Demo (1st Review Meeting, Finland, June 2017) : System Interoperability
- MANO Interoperability Testing between EU-KR 5G Core (PyeungChang Olympic, Feb. 2018)

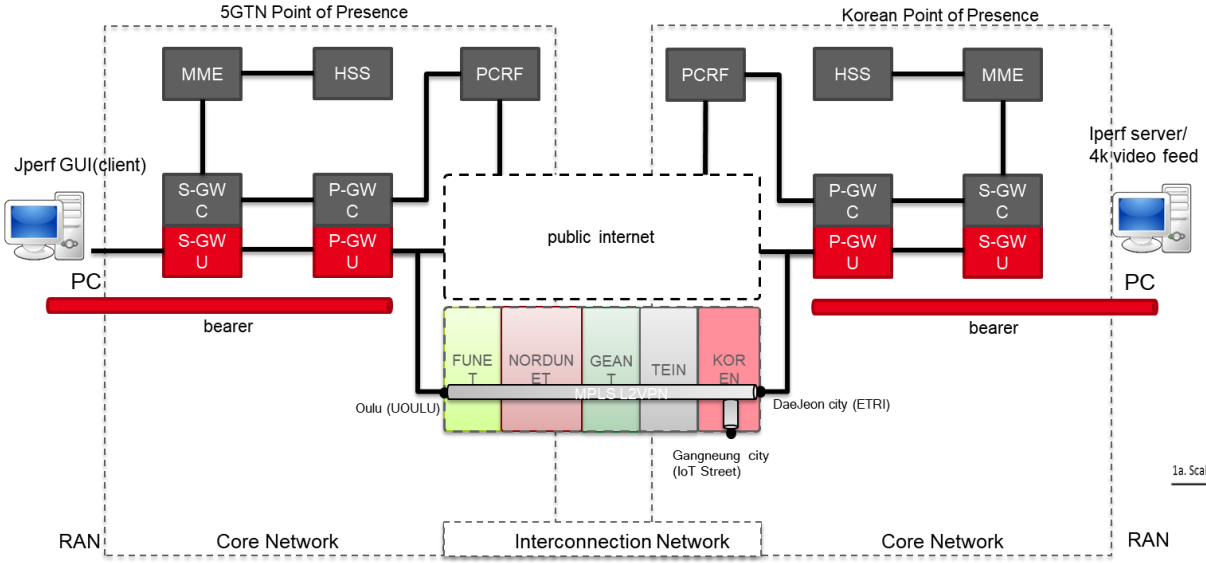

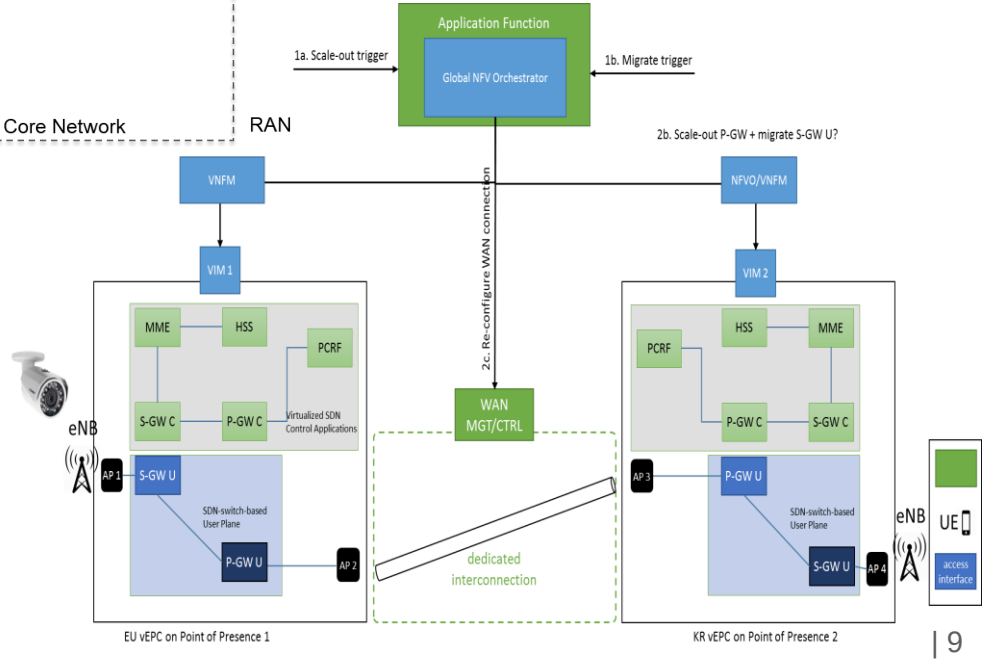

Intercontinental Interconnection Demo: TCP Throughput Testing

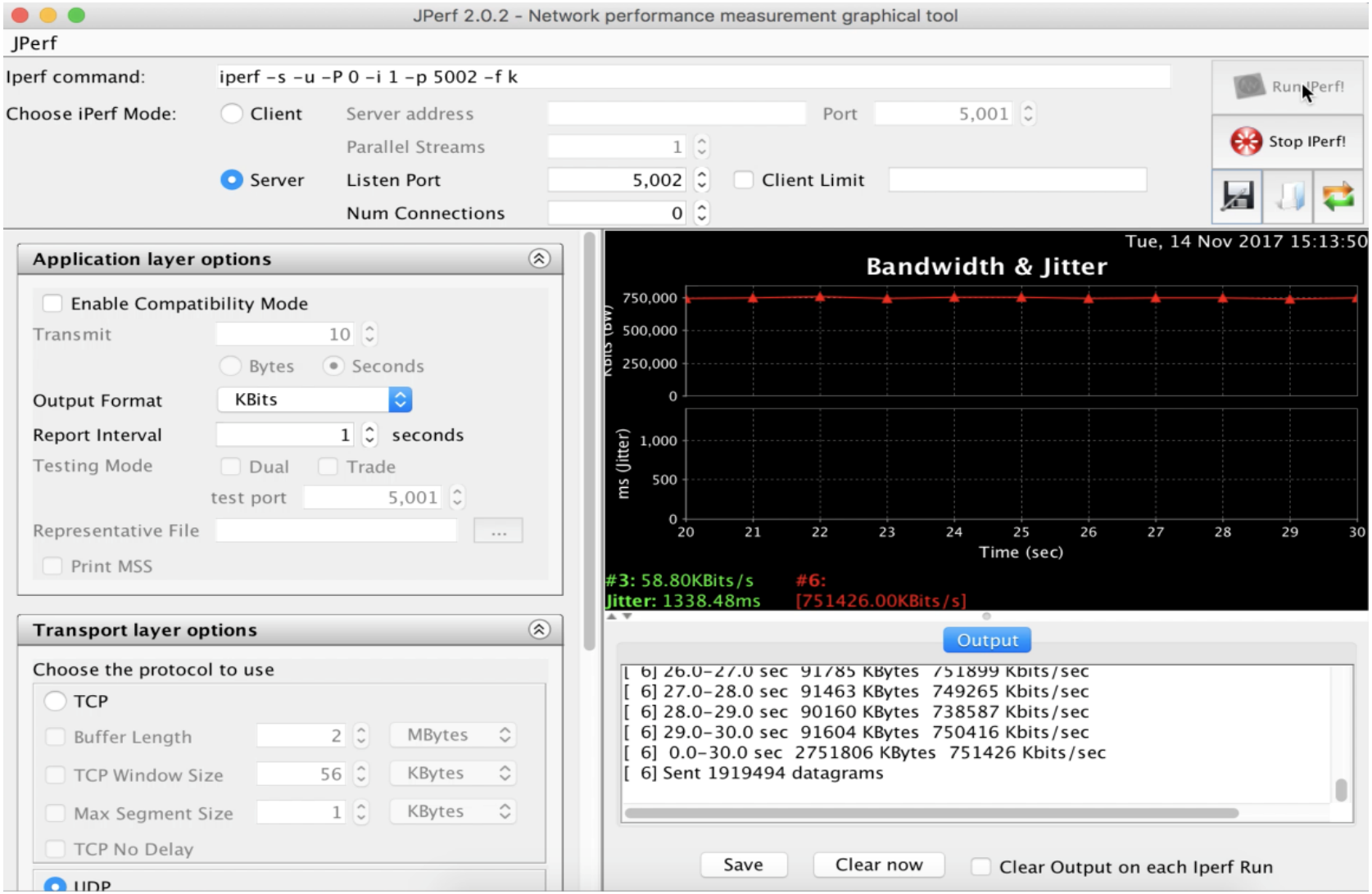

Intercontinental Interconnection Demo: UDP Throughput Testing

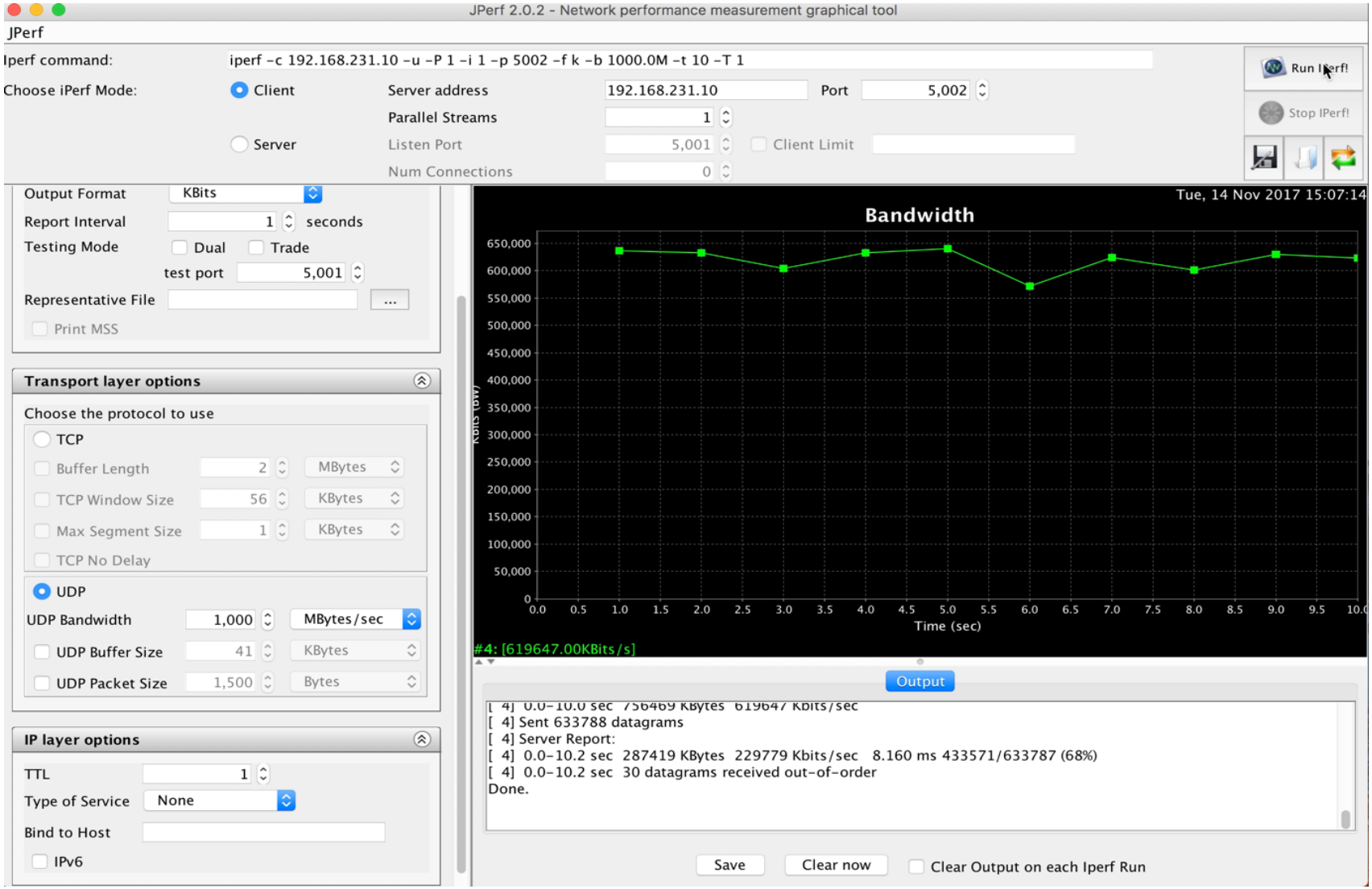

MANO Interoperability Testing

- **ETSI NFV SOL WG (Solution WG)**
  - Started from May 2016
  - Stage-3 protocol based on ETSI NFV GS IFA specification

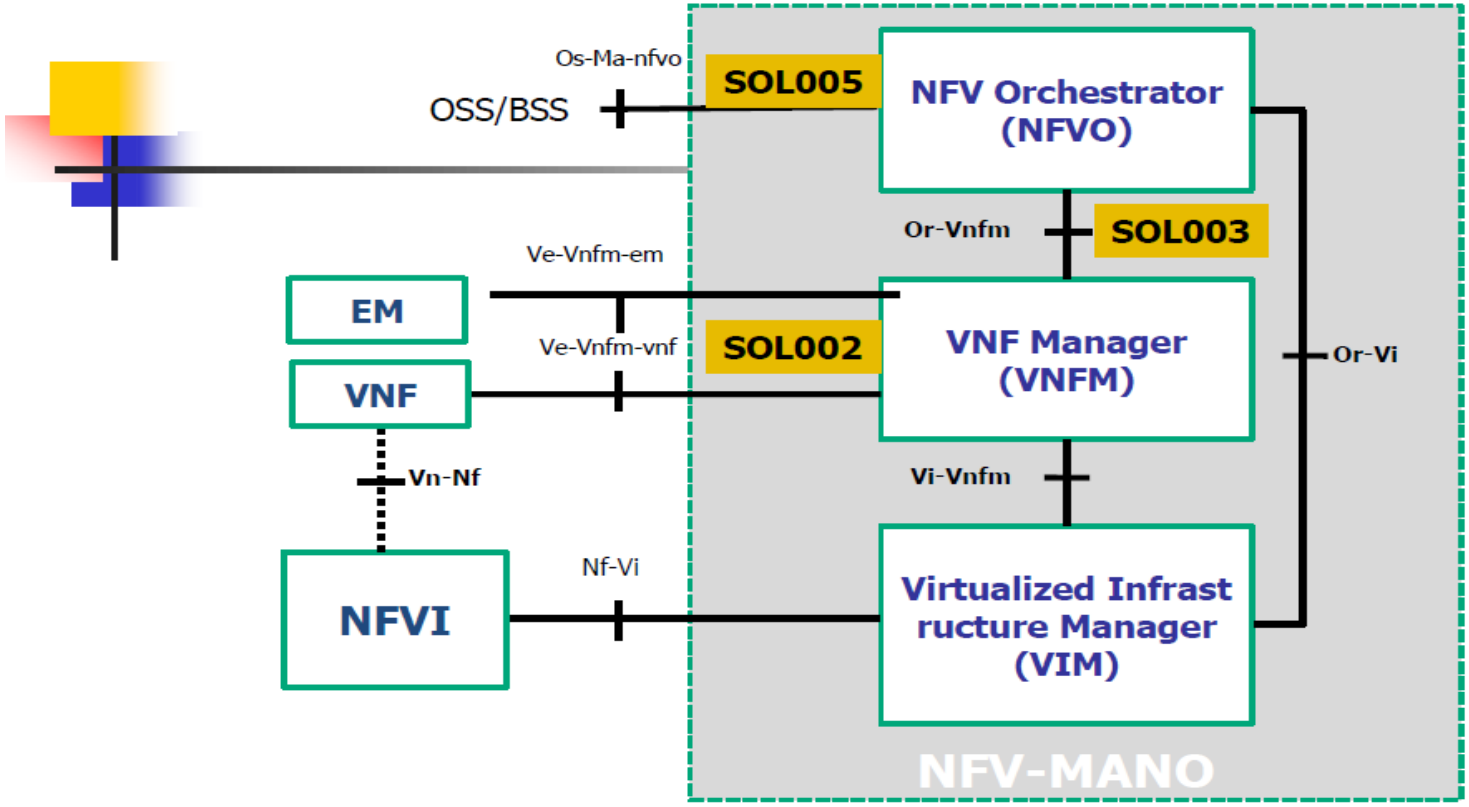

SOL001 TOSCA based NFV descriptors specification

SOL004 VNF Package specification

MANO Interoperability Testing

- **MANO IOP(Interoperability) for 5GCHAMPION**

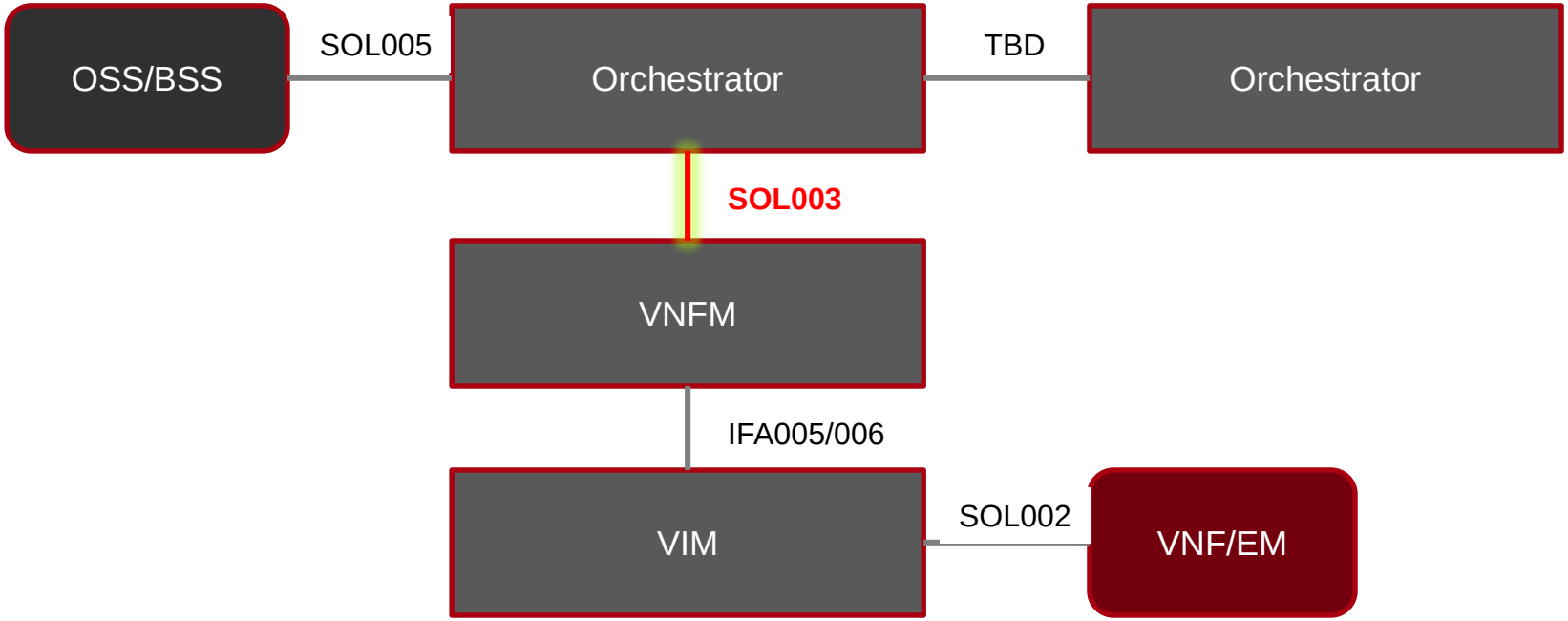

M-IOP-5GCHAMPION Candidate Interfaces

MANO Interoperability Testing

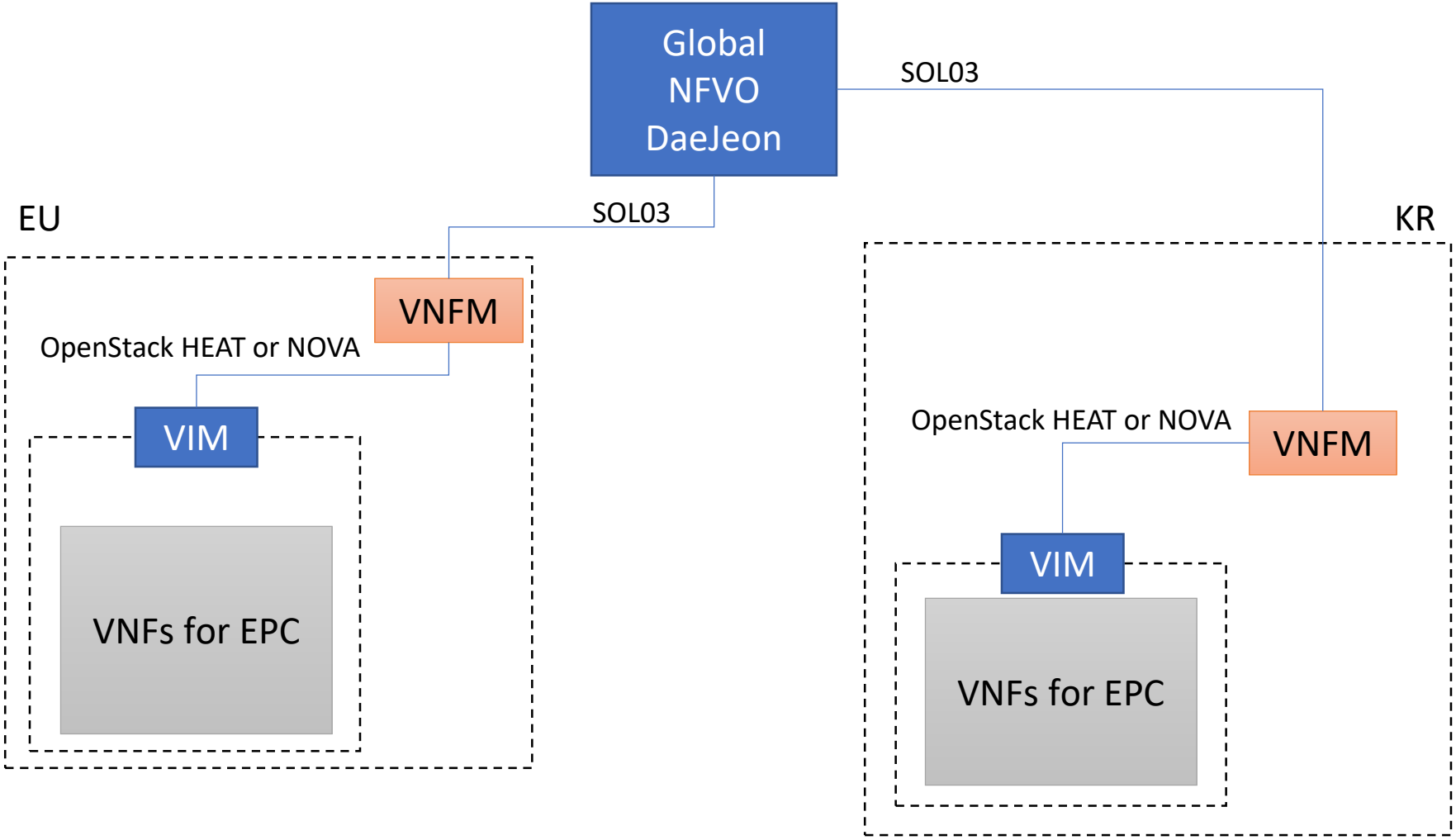

MANO Interoperability Testing

- **APIs for IOP**
  - **VNF LCM interface**
    - Create VNF instance resource (VNF Identifier)
    - Delete VNF instance resource (VNF Identifier)
    - Instantiate VNF
    - Terminate VNF
    - Operate VNF
    - Scale VNF
    - Create Subscription
    - Create Notification
  - **VNF Indicator interface**
    - Get Indicator Value
  - **VNF LC operation Granting interface**
    - Grant Lifecycle Operation
  - **VNF Package Management interface**
    - Read VNFD

MANO Interoperability Testing

- **VNF packages for IOP**
  - Contains
    - the VNF descriptor (VNFD) that defines metadata for package onboarding and VNF management
    - the software images needed to run the VNF
    - optional additional files to manage the VNF (e.g. scripts, vendor-specific files etc.)
  - Is digitally signed and delivered by the VNF provider as a whole
  - Is immutable (protected from modification)
  - Is stored in a repository by the NFVO
  - Can be accessed by VNFM

- **VNFD for IOP**

- Defines VNF properties, such as
  - Resources needed (amount and type of Virtual Compute, Storage, Networking)
  - Software metadata
  - Connectivity
    - External Connection Points (described via CP Descriptors, CPD).
    - Internal Virtual Links (described via VL Descriptors, VLD)
    - Internal Connection Points (described via CP Descriptors, CPD)
  - Lifecycle management behavior (e.g. scaling, instantiation)
  - Supported lifecycle management operations, and their configuration
  - Supported VNF specific parameters
  - Affinity / anti-affinity rules

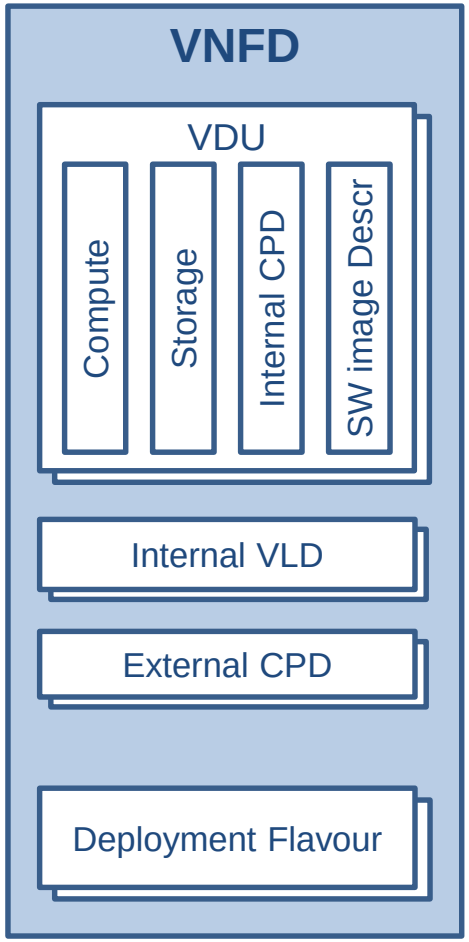

- Defines deployment flavours (size-bounded deployment configurations, e.g. related to capacity)

PoC in GangNeung

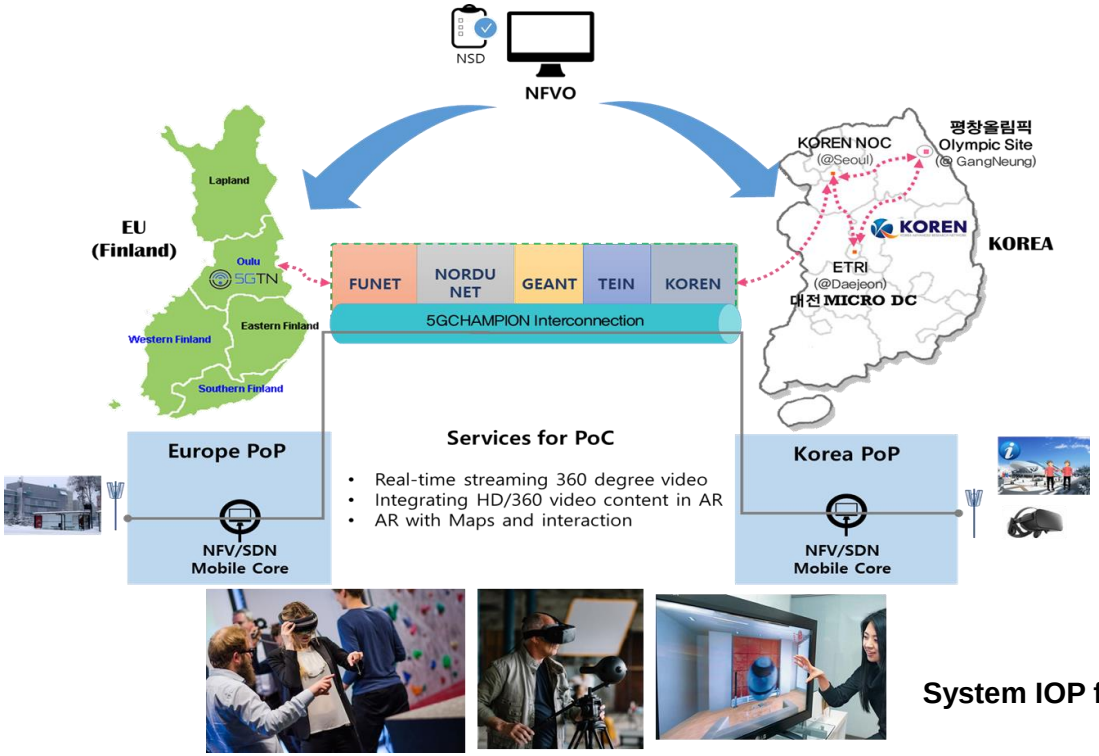

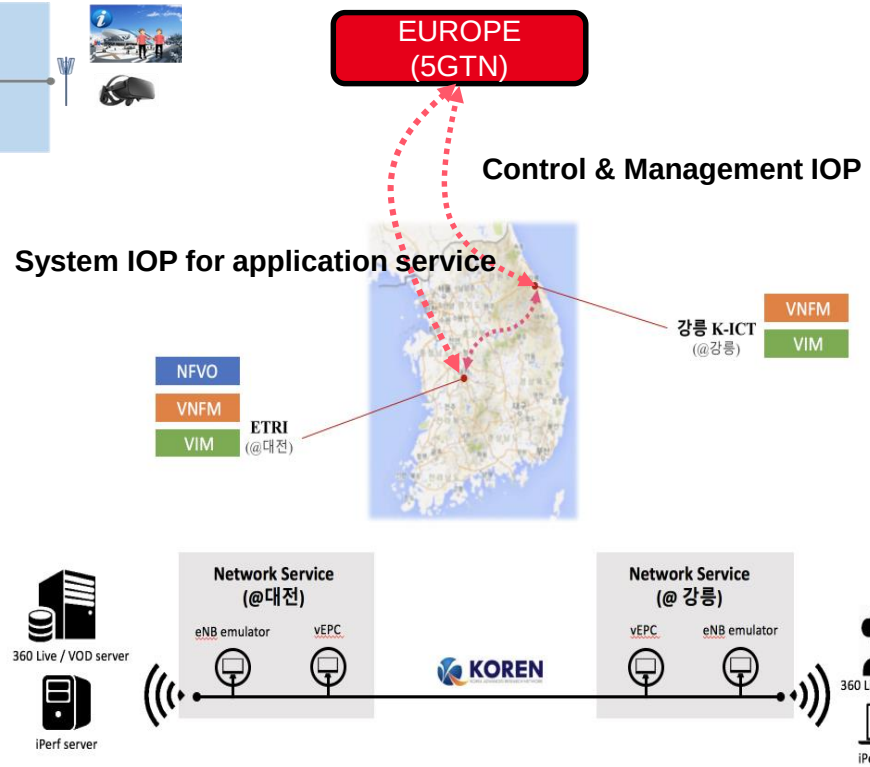

MANO IOP PoC: VNF Instantiation Scenario

1. vEPC instantiated

- Femto AP for LTE service
- eNB Simulator for mobile core performance test

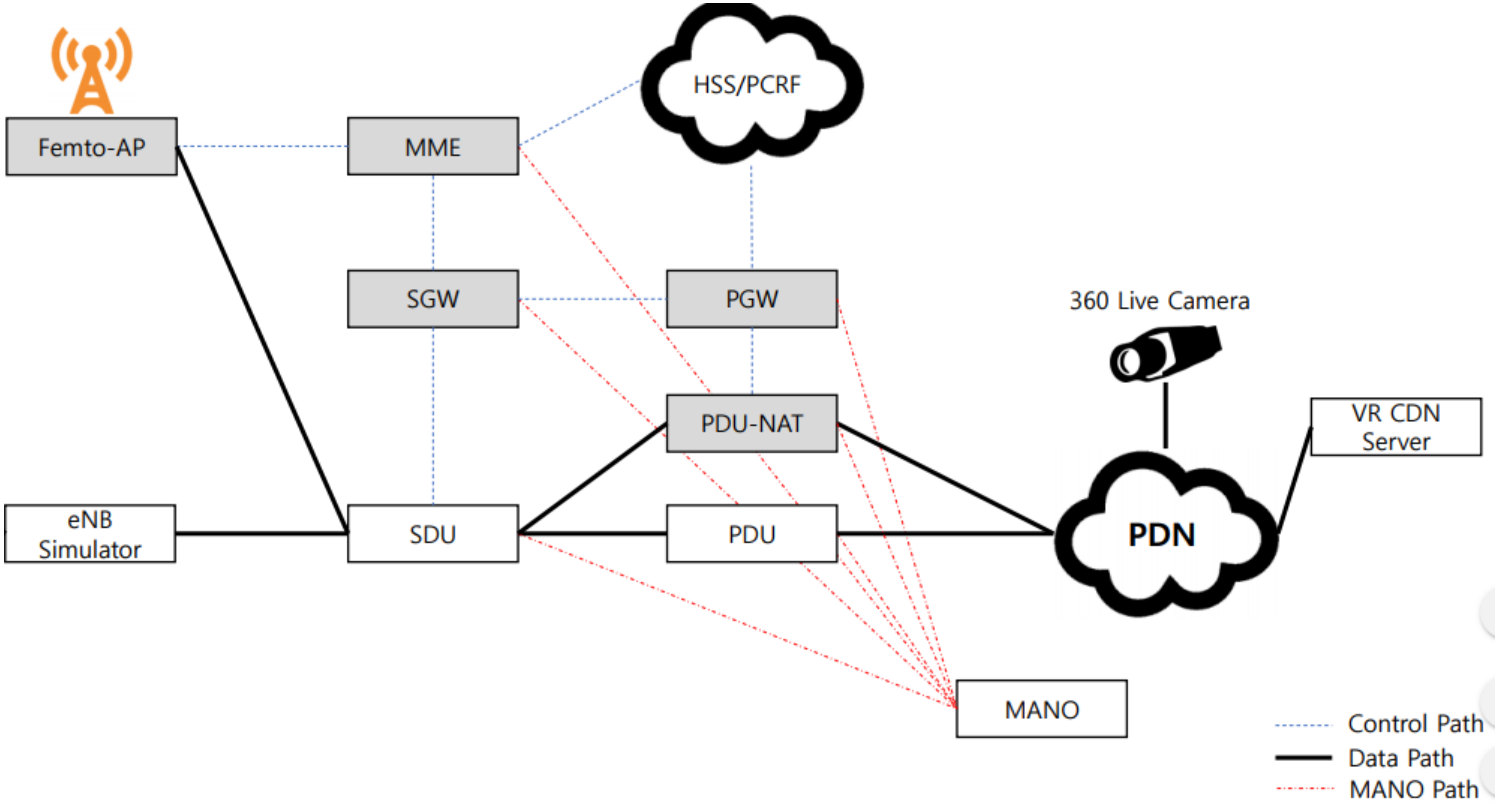

MANO IOP PoC: 5G Core based Service Operation Scenario

2. Events from 360 Live & CDN service

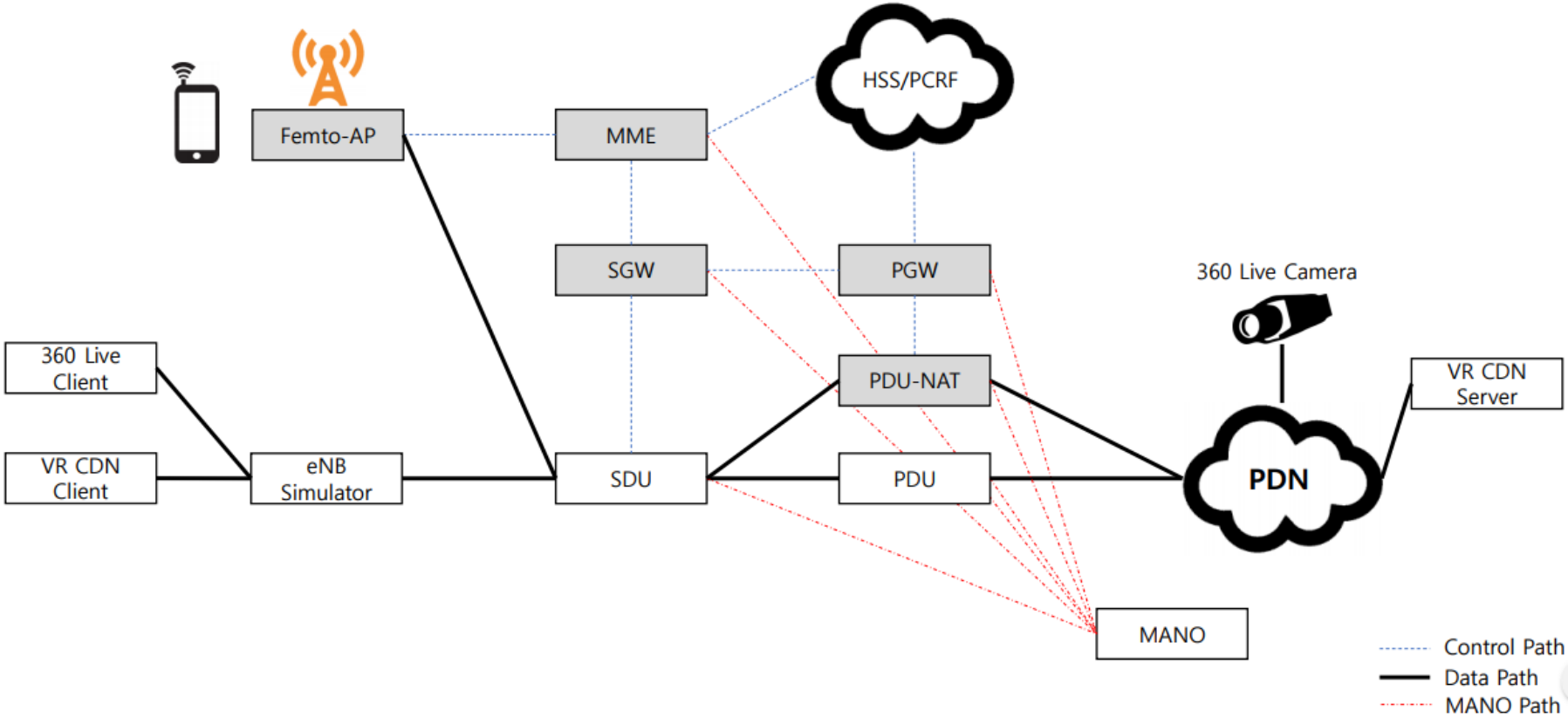

MANO IOP PoC: Auto-Scaling Operation Scenario

3. Auto-scaling operation

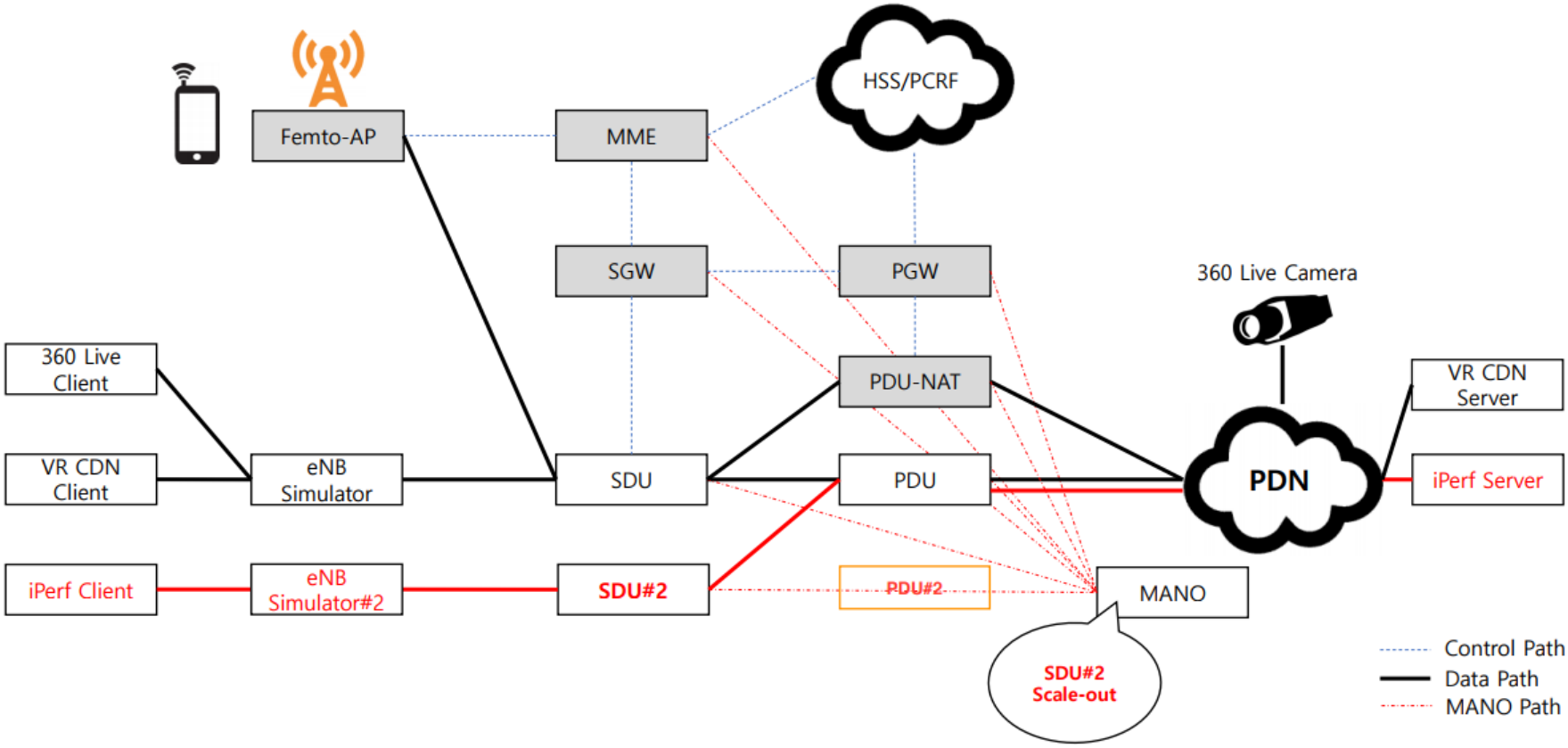

Thank You

choits@etri.re.kr